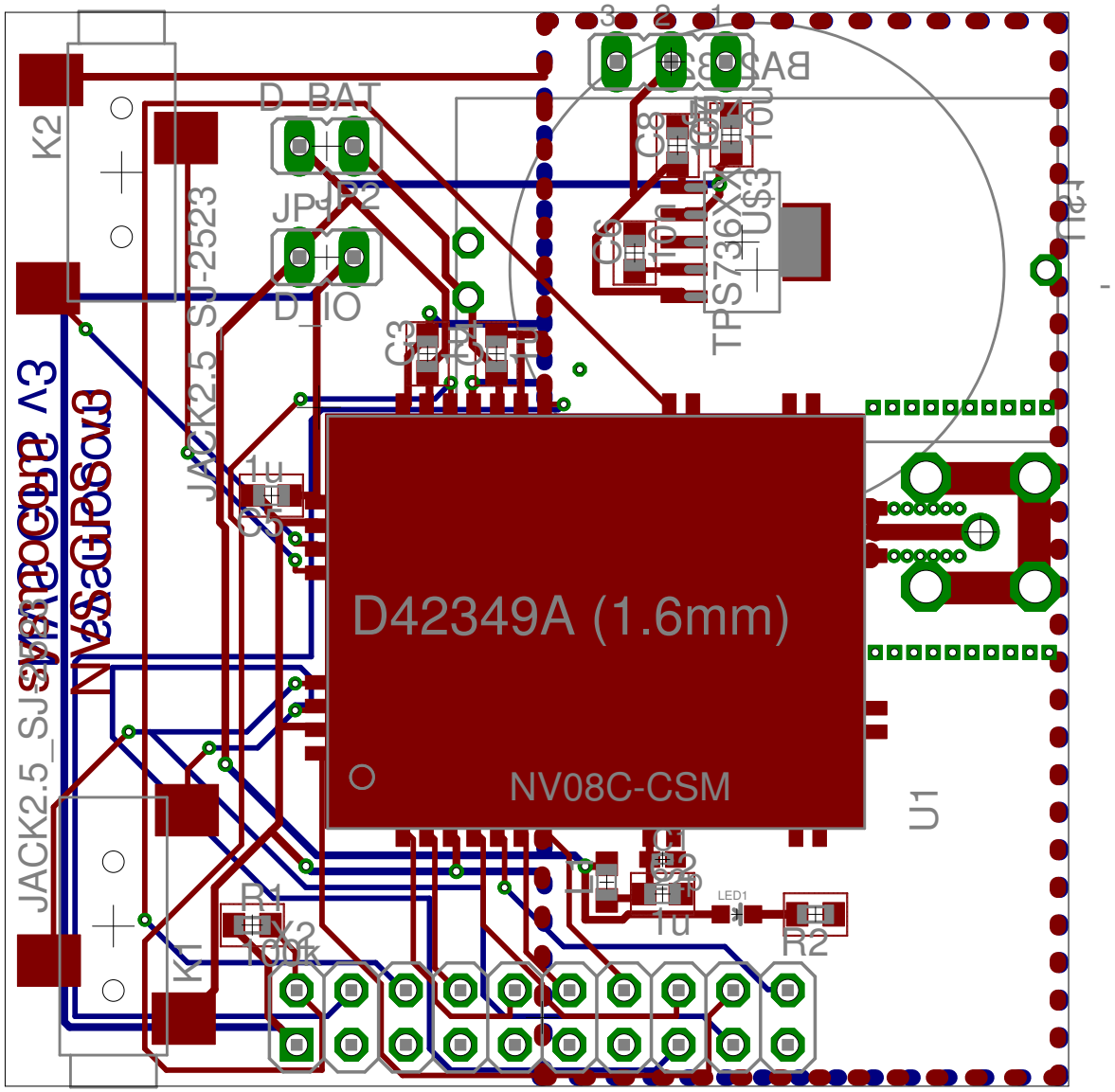
D42349A (1.6mm)
NV08C-CSM
U1
JACK2.5_SJ-2523
JACK2.5_SJ-2523
K1
K2
D_BAT
D_IO
JP1
R2
C3
C8
C5
U$3
TPS736XX
LED1
R1
R2
1u
1u
1u